UQiGT

DOT V 1.0

USER MANUAL

Attach the
SN Code here

The SN Code of your scooter.
Please see P.4 for detailed information.

This owner's manual contains important safety, operational and maintenance information. Any person operating or riding as a passenger on your scooter should carefully read and fully understand the entire contents of this manual prior to riding the vehicle. For your safety, follow all safety warnings contained within the owner's manual and the labels applied to your scooter. If you have any questions, please ask your dealer for assistance.

⚠ WARNING California Proposition 65

Lithium-ion Batteries and/or products that contain Lithium-ion Batteries can expose you to chemicals including cobalt, lithium, nickel oxide, and nickel, which are known to the State of California to cause cancer and birth defects or other reproductive harm.

For more information go to www.P65Warnings.ca.gov.

CONTENTS

General Notice ---- 01
Precautions ---- 02
Safety Notice ---- 03
Download APP and Register ---- 04
Installation Guide ---- 05
Parts Info ---- 07
Operation Guide ---- 12
Battery Use and Maintenance ---- 16
DOs and DON'Ts while Riding ---- 22
Reporting Safety Defects ---- 24
Federal Communications Commission (FCC) Compliance Statement for USA ---- 25
Maintenance and Repair ---- 26
Troubleshooting List ---- 30
Technical Parameters ---- 34
Maintenance Record ---- 37

General Notice

- Please read this User Manual carefully for proper operation before riding the scooter.
- Please follow the traffic laws. Slow down on slippery roads in bad weather to allow greater braking distance for your safety.
- You should always use original OEM NIU parts for all maintenance and repairs as they have been designed specifically for your vehicle
- Your authorized NIU dealer is the primary resource for information, parts and service. If you have additional questions about the product, please visit www.niu.com/us.

Precautions

- Riding Conditions
  UQi GT scooter is not designed for off-road use.
- This User Manual should be deemed as a permanent document of UQi GT scooter. If this scooter is transferred to others, this User Manual should also be handed over to the new owner.
- Reproduction or reprint of any part of this User Manual is strictly prohibited.

⚠ **WARNING:** Do not exceed speed limit and apply brakes cautionsly. Always use side stand or center stand when parking.

⚠ **ATTENTION:** Failure to follow the instructions herein may lead to serious injuries or death.

Safety Notice

- Always wear a quality DOT approved helmet as well as suitable eye protection.
- Choose quality gloves, boots, pants, jackets and other riding apparel specifically designed with protective features. Loose clothing can be unsafe when riding your scooter.
- Wear bright, reflective apparel to make yourself visible to fellow drivers. Position yourself on the road where other drivers can easily see you.
- Use your turn signals, hand signs, horn and other methods to help others locate you and understand your driving actions.
- Road conditions can vary greatly with weather, foreign material, elevation etc. Your riding stability and braking power are limited by the grip of the tires on the road surface.
- When encountering slippery road surfaces, braking distance will increase significantly and riding stability will be reduced. Reduce vehicle speed and perform all actions in a gradual and deliberate manner to prevent accidents. Use extreme extreme caution on painted surfaces or metal objects such as manhole covers or train rails when they are wet.
- Please follow the Operation Guide (P.12) to fully understand how to properly operate the scooter.

Downloading the APP

Functions such as checking battery level, locating, and management can be implemented on the electric scooter through the app.

Step 1 Download "NIU E-Scooter" APP from Apple store or Google Play. You can also scan the QR code to begin download of the APP.

Step 2 Open NIU app and select "Sign Up" and follow the registration process. Once registration is complete, select "Device Binding" option. Once device binding is selected, a QR code scanner box will appear.

Step 3 Align the QR code on the inside cover page with the QR code frame on the phone. Once the code is scanned, the NIU app will bind to the vehicle.

NOTE:

The mobile phone system is required to be at least Android 4.0 or iOS 8. Make sure that the mobile phone has been connected to the Internet when running the app (Wi-Fi / 2G / 3G / 4G).

Installation Guide

Step 1 Insert the key into the key barrel located near the seat to remove the accessories box.

Step 2 Take out the rearview mirrors and check them carefully. Install the left rearview mirror in the mounting hole on the left brake lever and turn it clockwise. The bolt shall be screwed in for more than 15mm.

Step 3 Adjust the rearview mirror to an appropriate position and then tighten nuts on the rearview mirror with a spanner. Properly set the dust cover. Install the right rearview mirror in the same way.

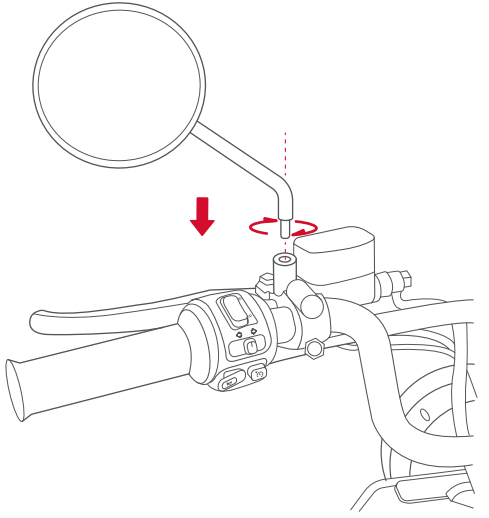

Step 4 Take out the foot rests and assemble the top and holder together with screws for both sides with M6 screws.

Step 5 Install the foot rests on two sides of the scooter frame with M6 screws.

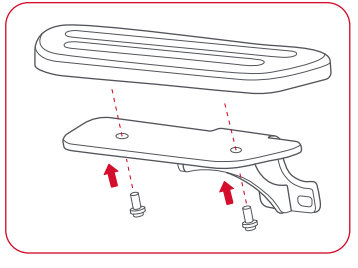

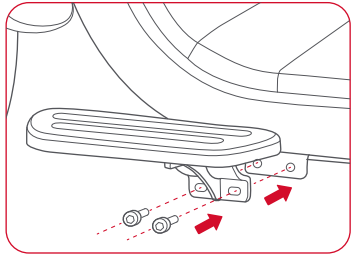

Parts Info

specs to be updated

Part 567 Certification Labels

Manufactured By: Changzhou Yamasaki Motorcycle Co., Ltd.			
Type of Vehicle: Motorcycle			**Date:**
GVWR: 269 Kg	**VIN:**		
GAWR	**Dimension** Tire	Rim	**Cold Inflation** Pressure
Front: 87 Kg **Rear:** 182 Kg	90/90-12 120/70-12	2.15*12 3.50*12	200 kPa(29PSI) 225 kPa(33PSI)
THIS VEHICLE CONFORMS TO ALL FEDERAL MOTOR VEHICLE SAFETY STANDARDS IN EFFECT ON THE DATE MANUFACTURE SHOWN ABOVE.			

MADE IN CHINA

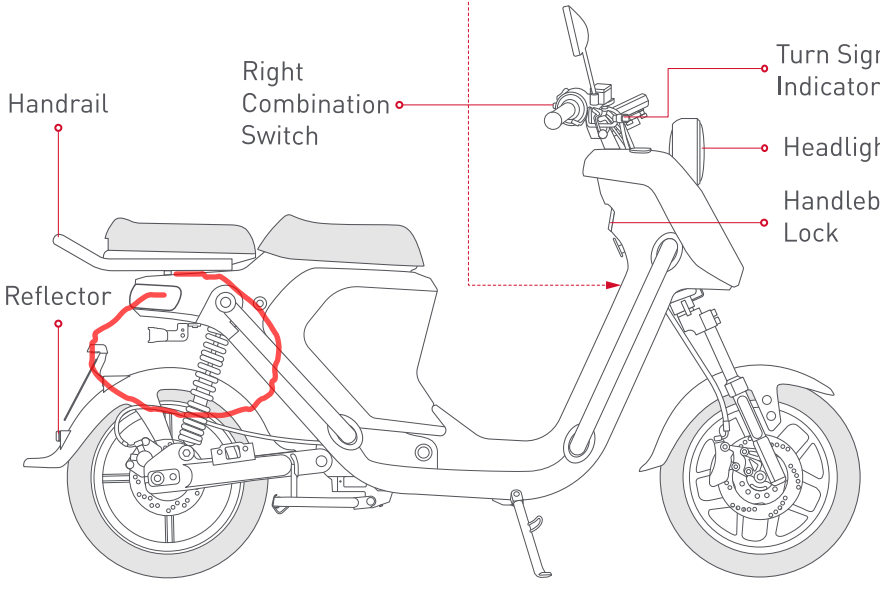

rear turn lamps to be confirmed

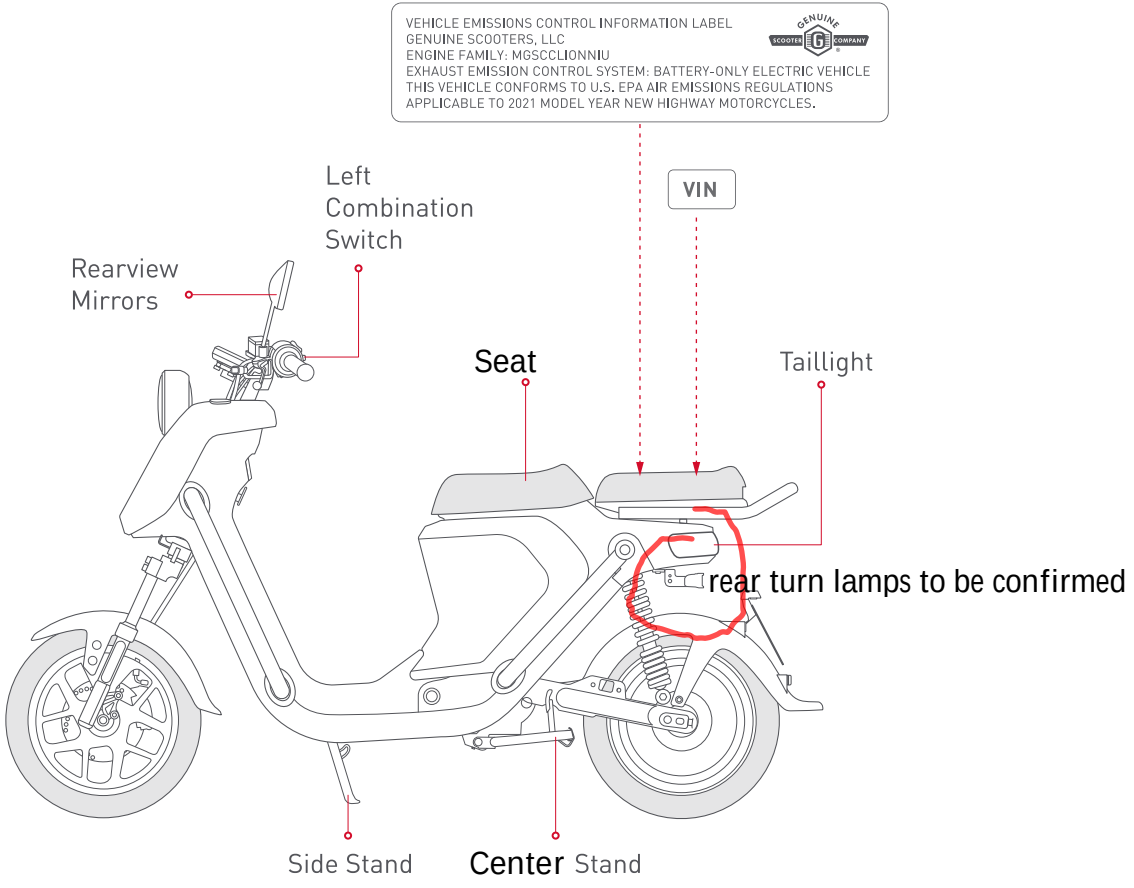

Dashboard Display Info

- Left Turn Indicator
- READY Ready Indicator
- Right Turn Indicator
- High Beam
- Low Battery Indicator

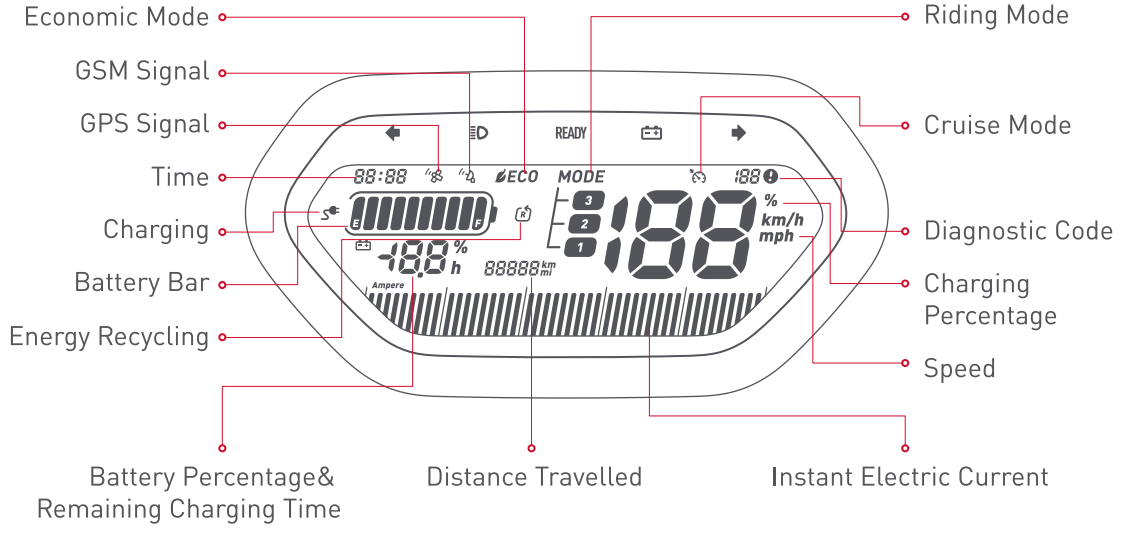

	Left Turn Indicator	The Left Turn Indicator is on.
	Right Turn Indicator	The Right Turn Indicator is on.
	High Beam	The High Beam is on.
READY	Ready Indicator	In Riding Mode.
	Low Battery Indicator	Battery level less than 10%.
10:00	Time	Now is 10:00
ECO	Economic Mode	Ideal energy consumption status.
	GPS Signal GSM Signal	No flashing: Signal strong. Bars are falshing: Signal weak. Entire icon flashing: No signal.
	Cruise Mode	The scooter is in Cruise Mode.
30	Diagnostic Code	The Diagnostic Code is 30. Please see the “Troubleshooting List”
	Energy Recycling Status	Energy is being recycled from braking.
	Battery Bar	Current battery level is 80~89%.

85%	Battery Percentage (Small)	Current battery level is 85%.
- 3.2h	Remaining Charging Time	The remaining charging time is 3.2 h (using scooter charging port).
	Charging	Battery is being charged.
00802mi	Distance Travelled	Distance Travelled is 802 miles.
	Instant Electric Current	Indicates instant power output.
MODE 2	Riding Mode	Mode 2 is selected.
15mph	Speed	Current speed is 15 mph.
13%	Charging Percentage (Large)	Current battery charging progress is 13% (using scooter charging port).

Operation Guide

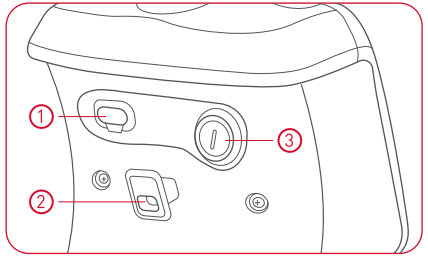

Front Storage Area

1. USB Port
2. Hook
3. Handlebar Lock

Unlocking the Scooter

Press the Unlock Button of the remote controller to disable the alarm. Insert the key into the keyhole of the handlebar lock, push inward, and turn clockwise to unlock the steering handlebar.

Locking the scooter

Press the Power Button again to turn off the scooter. Turn the steering handlebar to the left, then Insert the key into the keyhole of the handlebar lock and turn counter-clockwise to lock steering handlebar. Press the Lock Button on the Remote Controller within an effective distance to turn on the alarm. The Turn Signal Indicators will stay on for 2 seconds after the scooter is properly locked.

Start the Scooter

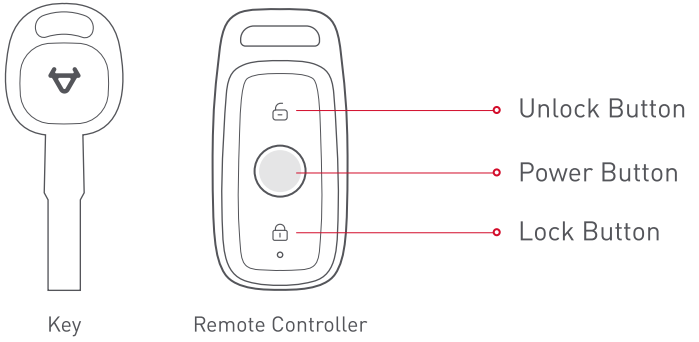

Step 1 Once the scooter is unlocked, press the Power Button of the scooter or the remote controller to turn on the scooter.

Step 2 Hold the brake and press the Start Button on the right handlebar for 2 seconds. The READY indicator on Dashboard will light up. Release the brake and the scooter is ready to go.

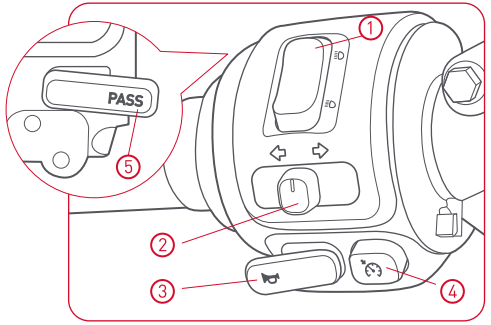

Left Combination Switch

① High/Low Beam Light

② Turn Signal Indicator

③ Horn

④ Cruise Mode switch

⑤ Passing Light Button

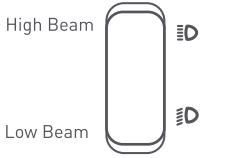

High/Low Beam Light: Press the upper part to switch to high beam; press the lower part to switch to low beam.

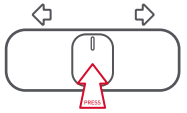

Turn Signal Indicator: Push the button left to turn on the Left Turn Signal Indicator; push the button right to turn on the Right Turn Signal Indicator. Press the button to turn off.

Cruising Mode: Push the button to cruise at current speed. Press again or brake to turn it off.

Passing Light Button: To signal passing with flashing light, the rider may press and release the Passing Light Button repeatedly.

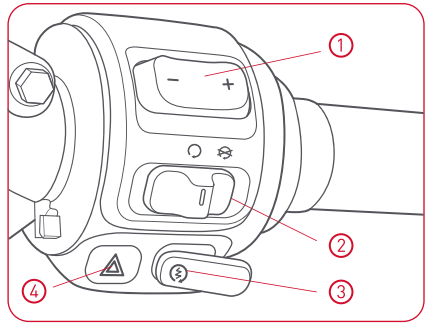

Right Combination Switch

① Mode Selector

② Engine Stop Switch

③ Start/Stop Button

④ Hazard Light Button

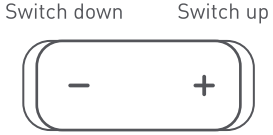

Mode Selector: Press right part to switch up the mode. Press left part to switch down the mode.

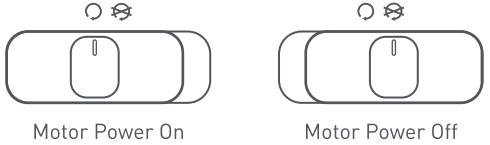

Engine Stop Switch: Push the switch left to activate motor power, push the switch right to cut off motor power.

Start/Stop Button: Press and hold the button for 2 seconds to set the scooter in the riding mode. The READY indicator on the dashboard will light up and you are ready to go. Press the button again to turn it off.

Hazard Light Button: Press the button to turn on the hazard light. Press the button again to turn it off.

Battery Use and Maintenance

Battery Level Indicator

- When the Indicator Button is pressed, the Indicator will light up to show the percentage of the battery. The indicator has 5 sections. Each presents 20% of the battery level.
- If the battery level is less than 20%, the Indicator will flash 3 times.
- When charging, the indicator will flash to show the charging progress. They will stop flashing when the battery is fully charged.
- If all the indicators flash, this means there is an issue with the battery. Contact your local NIU dealer.

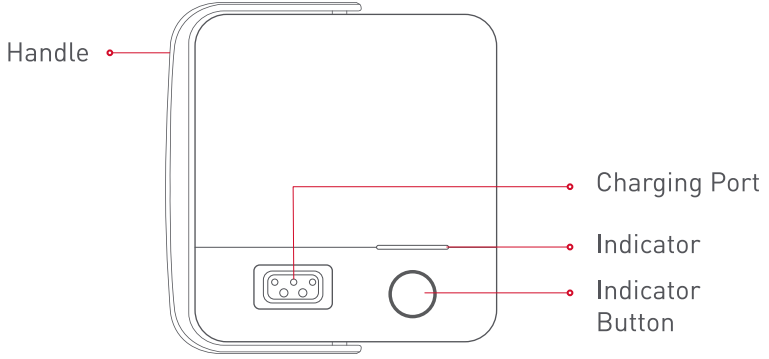

Battery Use and Maintenance

Using Environment

In order to prevent possible leakage, overheating, smoking, fire or explosion, please follow these instructions:

- The battery should be used at the temperature of -10°C to 45°C.
- Do not expose to water, beverages or corrosive liquids.
- Keep away from heat source, open fire, inflammable and explosive gases and liquids.
- Please keep metal parts away from the battery compartment.

In case of undesirable odor, high heat or deformation of the battery, please disuse the battery immediately, keep away from the battery and contact your dealer.

⚠ **WARNING:** The battery is NOT a repairable part by the user. In case of battery fault, please contact your dealer. Users dismantling the battery may lead to leakage, overheating, smoking, fire or explosion. Do not attempt to open or repair the battery, as any attempt to do so will void the product warranty.

Charging Environment

The battery should be charged at the temperature of 0°C to 35°C. The charging time should not exceed 24 hours. Overcharging will shorten the battery life.

⚠ **ATTENTION:** Do not charge the battery below 0°C.

⚠ **WARNING:** Using non-OEM battery chargers may lead to leakage, overheating, smoking, fire or explosion.

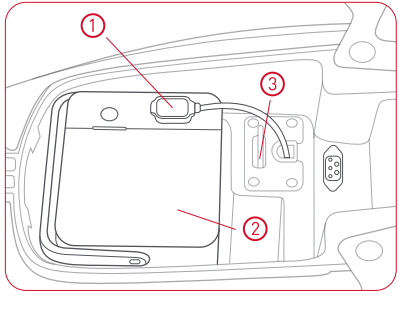

① Battery Connector/Charging Port

② Battery

③ Battery Lock

Charging Methods

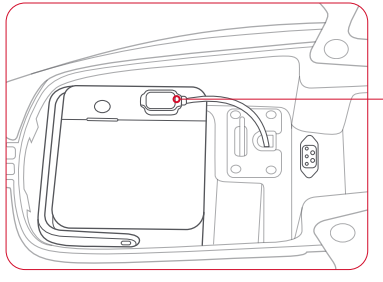

Charging Port

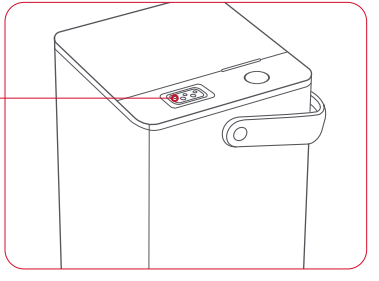

Charging on the Scooter

Open the seat, open the cover of the connector, and plug the charger into the charging socket.

Charging the Battery

Remove the battery from the scooter. Connect the charger with battery and socket.

⚠ WARNING

- All battery operation should strictly follow the guidelines in the user manual. If not, the product warranty will be voided.
- Must use original OEM charger specified for the type of battery with correct applied voltage.
- Charging should be in ventilated environment. DO NOT charge in closed space or under high temperature. DO NOT put charger into trunk or tail box while charging.
- When going to charge battery, connect battery with charger before connecting to electrical outlet. After fully charged, disconnect from outlet before unplugging battery plug.
- When the green light turns on, disconnect the power in timely manner. Avoid having charger and AC power connected for long time while not charging.
- While charging, if battery signal light is abnormal, if there is an odor, or the charger is over temperature, please stop charging immediately and check or change the charger.
- Keep water and other liquids away from charger to avoid internal short circuits.
- DO NOT travel with charger in scooter unless properly protected to avoid damage.
- DO NOT disassemble or change parts in charger.

⚠ ATTENTION

- If the battery can not be fully charged after 12 hours, please stop charging and contact your dealer.
- To maximize the battery life, please keep the battery percentage within 20% to 80%.
- For storage, please keep the battery under 40°C to prevent irreversible capacity loss of the battery.
- UQi GT battery will lose more capacity in lower temperature conditions. To be more specific, the usable capacity at -10°C is 70%, 85% at 0°C and 100% at 25°C.
- The best battery capacity performance for storage is 50%. Storing battery with less than 10% or more than 90% over a long period of time will cause irreversible capacity loss to the battery.
- The battery needs to be taken out of scooter for storage longer than one week. In this condition, please keep the battery at the temperature of 0°C to 20°C with capacity of 30%-70%. It's advised to have at least one cycle of charge and discharge every 2 months to minimize battery capacity loss during storage.
- If the battery failure is due to misuse or lack of proper maintenance as instructed, its warranty will be voided.
- Falling may cause internal damage to the battery and may cause leakage,overheating, smoking, fire or explosion.

DOs and DON'Ts while Riding

Before Riding

Please check the following details before riding.

Check Point	Description
Steering Handlebar	(1) Steadiness (2) Steering flexibility (3) No axial displacement or loosening
Braking	Braking lever has 5 to 9mm idle travel.
Tyres	(1) The air pressure range of front tire is 29 psi;The air pressure range of the rear tire is 33 psi. (2) Proper tire tread depth (3) No cracks or openings
Battery	Adequate for planned distance to travel.
Lights	Check all the lights—High Beam, Low Beam, Brake Light, Turn Signal Indicator, etc.
Horn	Check whether the horn is operable or not.

Braking Precautions

Only apply brakes when the scooter is upright. If the tires are locked and the scooter loses steering ability resulting from excessive braking force, loosen the grip on the brake lever. The tires will unlock and the scooter will be stabilized. Try to maintain a 1:1 ratio of front and rear braking force on slippery roads.

For your safety, do not exceed the speed limit, use the brakes gently to maintain a safe speed while riding downhill.

⚠ **ATTENTION:** Inexperienced riders tend to use the rear brake only, which will accelerate the wear of the brake and result in a longer braking distance.

⚠ **WARNING:** Using the front brake or rear brake only is dangerous because of possible grip or control loss. Pay extra attention and use the brakes gently when riding on damp, slippery roads and around corners.

Reporting Safety Defects

Changzhou Yamasaki Motorcycle Co., Ltd.
No. 181, Hehai West Rd., Xinqu Changzhou, Jiangsu Province

If you believe that your vehicle has a defect which could cause a crash pr could cause injury or death, you should immediately inform the National Highway Traffic Safety Administration (NHTSA) in addition to notifying Changzhou Yamasaki Motorcycle Co., Ltd..
If NHTSA receives similar complaints, it may open an investigation, and if it finds that a safety defect exists in a group of vehicles, it may order a recall and remedy campaign. However, NHTSA cannot become involved in individual problems between you, your dealer, or Changzhou Yamasaki Motorcycle Co., Ltd..
To contact NHTSA, you may call the Vehicle Safety Hotline toll-free at 1-888-327-4236 (TTY: 1-800-424-9153); go to http://nhtsa.safecar.giv; or write to Administrator, NHTSA, 1200 New Jersey Avenue SE, Washington, DC 20590. You can also obtain other information about motor vehicle safety from http://www.safecar.gov

Federal Communications Commission (FCC) Compliance Statement for USA

The Smart Central Controller, the Remote Controller and the Alarm comply with part 15 of the FCC rules. Operation is subject to the following two conditions: (1) This device may not cause harmful interference, and (2) this device must accept any interference received, including interference that may cause undesired operation.

Smart Central Controller
FCC ID: 2AQ95-NIUU3LTE
MODEL: U3LTE

Remote Controller
FCC ID: 2AQ95-NIUD23
MODEL: D23

Alarm
FCC ID: 2AQ95-NIURP708-U1
MODEL: RP708-U1

Maintenance and Repair

Users are advised to have the scooter checked and maintained on a regular basis, even for the scooters that are not used as frequently.

Regular Maintenance

Users are advised to have their scooters checked one month after purchase or within 500 miles travelled distance. Overall check and maintenance is advised to be conducted every 6 months or 1,875 miles thereafter.

Scooter Washing

Please always take out the battery before washing the scooter. Please use neutral detergent and water to wash the scooter. Use soft cloth to wipe the scooter after washing to prevent scratching.

⚠ ATTENTION

If the scooter is frequently used in overload, high-speed, bumpy or up/downhill riding conditions, the maintenance cycle should be shortened.

For more guaranteed quality and longer service life, please use original parts, which are under normal warranty.

⚠ WARNING

Do not use pressure washer to wash the scooter, especially around the battery compartment. Do not flush the rear inner mudguard, where the charger, controller and other parts are installed behind. If the charging port on the scooter is wetted, please do not charge before the charger dries off. Contacting your dealer is recommended.

Short-term Storage

- Keep the scooter in flat, steady, well-ventilated and dry area.
- Charge the battery to 50% full before storage to maximize battery life.
- Avoid exposure under sunlight and rain to reduce damage or aging.

Long-term Storage

- Remember to have a cycle of charge and a discharge at least every 2 months and charge the battery to 50% full before storage to maximize battery life.
- Charge the battery to 100% full after long-term storage.
- Check all the parts carefully to make sure that there is no problem before riding it. If there's any problem, take the scooter to your dealer for maintenance or repair.

⚠ WARNING: Please disconnect the battery from the scooter during storage.

Regular Maintenance Checklist	
Regular Safety and Performance Check	Brakes
	Lights
	Horn
	Electric Parts
	Tires
Structural Check	Lubrication
	Wheel Bearing
	Vibration Damper
	Side Stand/Center Stand
	Steering Bearing
Major Parts	Battery
	Main Wiring Harness
	Control System

Troubleshooting List		
Malfunction Description	Causes	Troubleshooting
No output when switched on	1. Dead battery 2. Batery not connected 3. Alarm failure	1. Charge the battery. 2. Check if it's properly connected. 3. Replace Alarm.
Motor failure when turning the twist grip after switched on	1. Battery voltage is low 2. The power off switch is enabled when pulling the brake lever 3. The Parking Mode has not been turned off yet	1. Charge the battery. 2. Do not pull the brake lever when twisting the twist grip. 3. Check "Start the Scooter" section. Check if the side stand is on.
Battery charge failure	1. Not properly connected 2. Battery temperature is too high or too low	1. Check whether the plug is loosened. 2. Wait for it to achieve normal temperature.
Dropping speed or range	1. Low battery level 2. Under-inflation of tyres 3. Frequent braking and overload 4. Battery aging or normal capacity loss 5. Low battery capacity resulting from low temperature	1. Charge the battery and check if the plug is properly plugged in and whether the charger is damaged. 2. Check the tyre inflation every time. 3. Develop good riding habits. 4. Replace the battery. 5. Normal situaiton.

Troubleshooting List		
Malfunction Description	Causes	Troubleshooting
Sudden stop during a ride	Dead battery	Charge the battery.
	Identify the fault causes in reference to the meter panel fault codes.	
00 displayed	Communication failure or Dashboard failure	1. Disconnect the battery and reconnect it after 30 seconds. 2. Check whether the wires are loosened. 3. Contact your dealer for professional checks.
10 displayed	FOC Controller locked rotor	Stop the scooter and restart later.
11 displayed	FOC Controller undervoltage/overvoltage	Stop the scooter and restart later.
12 displayed	FOC Controller overcurrent	Contact your dealer for professional checks.
13 displayed	FOC Controller overtemperature	Disconnect the battery and cool it down before reuse.
20 displayed	Motor overtemperature	Stop the scooter and restart when cooled down.
30 displayed	Battery overcharged	Turn on the headlight and hazard light to discharge until the code disappear.
31 displayed	Charging overcurrent	Stop charging the battery and check if the charger is failed.

Troubleshooting List		
Malfunction Description	Causes	Troubleshooting
32 displayed	Charging at low temperature	Take the battery indoor until back to normal operating temperature.
60 displayed	SIM card identification failure	Contact your dealer for professional checks.
62 displayed	GPS module failure	
63 displayed	GPS antenna short circuit	
64 displayed	GPS antenna open circuit	
65 displayed	ECU SN missing/incorrect	
67 displayed	SIM card unpaid/inactivated/ low signal strength	
99 displayed	Electronic components communication failure	
110 displayed	FOC Controller failure	
111 displayed	1. The scooter is locked 2. FOC Controller verification failure	1. Press unlock button on the Remote. 2. Contact your dealer for professional checks.
120 displayed	Motor failure	Contact your dealer for professional checks.
130 displayed	Battery overdischarged	Charge the battery.
131 displayed	Over-current discharging	Stop the scooter and restart later.

Troubleshooting List		
Malfunction Description	Causes	Troubleshooting
132 displayed	Battery overtemperature	Stop riding and let battery cool down.
133 displayed	Battery undertemperature	Charge the battery after it reaches the operating temperature range.
140 displayed	Twist grip failure	Please check the wires of the twist grip or contact your dealer for professional checks.
161 displayed	The scooter is locked by remote command	Contact your dealer for professional checks.
190 displayed	Controller communication failure	
191 displayed	BMS communication failure	

Technical Parameters

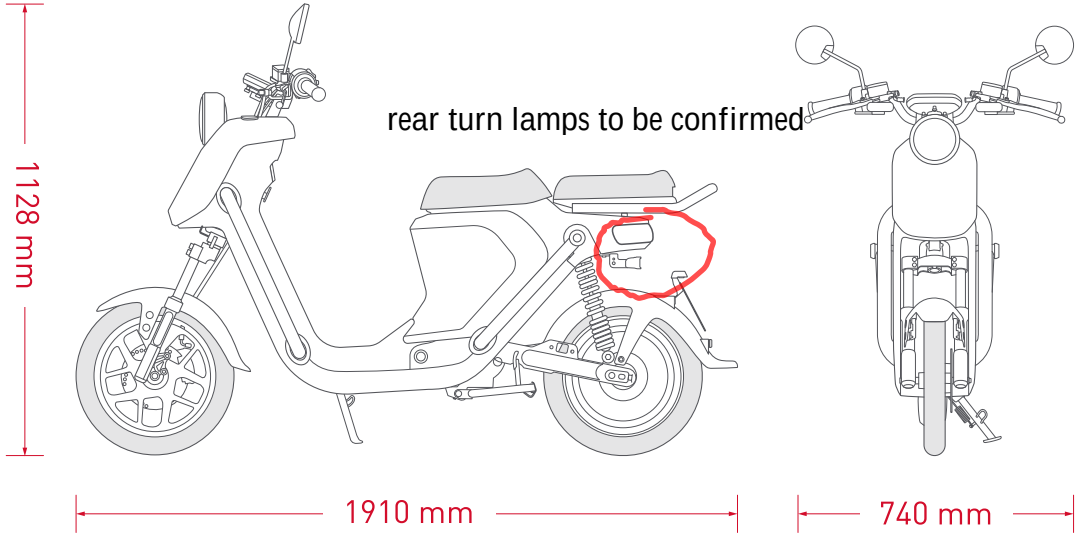

		UQi GT Pro	UQi GT Sport
Features	Diamension	1910 x 740 x 1128 mm	
	Product Weigh(battery included)	77kg	
	Maximum Load	227 kg	
	Designed Capacity	2 Persons	
	Range[1] ranged to be tested	TBD	TBD
	Gradeability	Dynamic: ~11°	
	Max.Speed	32 km/h	
Battery System	Voltage	48 V	
	Standard Charging Current	5.2 A	
	Maximum Discharging Current	40 A	
	Capacity	42 Ah	31 Ah
Power System	Motor	Option 1: Tailored Motor by Bosch GmbH Option 2: Niu Motor	
	Motor Control Mode	FOC Vector Control	
	FOC Controller Max. Current	40 A	
	Motor Rated Power	1200 W	
	Max. Motor Continuous Power	1500 W	
	Energy Csonsumption	Bosch Motor: 33 Wh/km Niu Motor: 33 Wh/km	Bosch Motor: 30 Wh/km Niu Motor: 29 Wh/km
Electrical System	Headlight/Turn/Indicator Taillight/Brake/Light Meter Panel	12V LED	
	Central Control Unit	12 V	
	USB Charging	5V/1A	

Frame	Front/Rear Damper	Oil Damping Direct Acting Shock Absorber
	Front Tyre Specification	90/90 - 14 Rim : 2.15 x 14
	Rear Tyre Specification	100/80 - 14 Rim : 2.50 x 14
	Front Brake Mode	220 mm Hydraulic Disk Brake
	Rear Tyre Pressure	180 mm Hydraulic Disk Brake
	Minimum Ground Clearance	180 mm
	Seat Height	845 mm

[1] Range: tested while riding under full power, 70 kg load, 25°C, ?? km/h average speed on pavement. 32 km/h

Maintenance Record

Date		Mileage	
Notes:			
Dealer:			

Maintenance Record

Date		Mileage	
Notes:			
Dealer:			

Maintenance Record

Date		Mileage	
Notes:			
Dealer:			

Maintenance Record

Date		Mileage	
Notes:			
Dealer:			

Maintenance Record

Date		Mileage	
Notes:			
Dealer:			

Maintenance Record

Date		Mileage	
Notes:			
Dealer:			

Maintenance Record

Date		Mileage	
Notes:			
Dealer:			

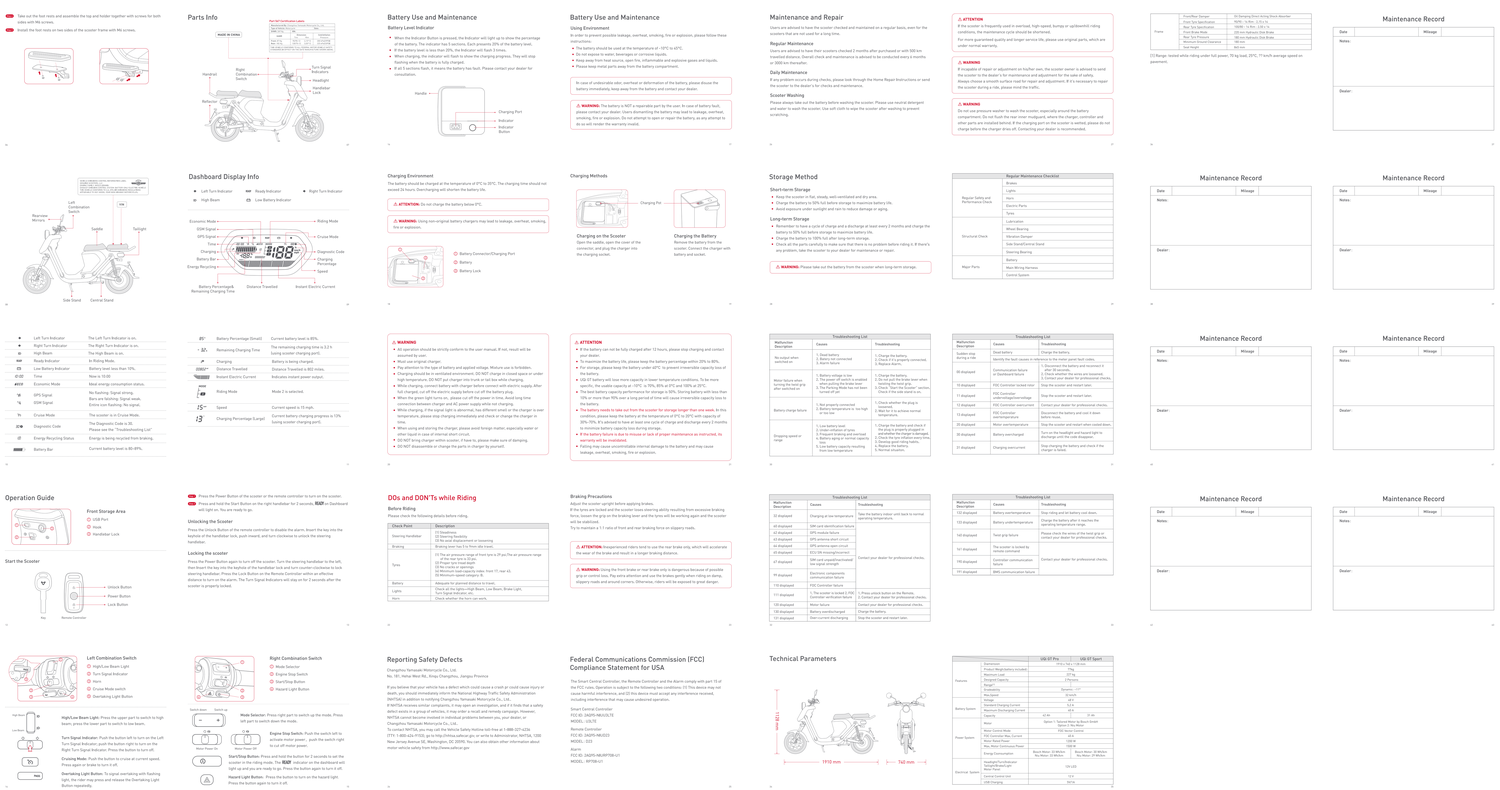

小牛电动
UQi GT 说明书（DOT）

物料编码

设计师

陈卫萍

设计时间

2020.03.02

数量

1

更改备注

批准

尺寸

成型尺寸：170*140 mm

展开尺寸：

方向

图纸方向：印刷方向

展开尺寸：XX方向

公差（无特殊说明下）

纸箱类：±3 mm

标签类：±0.5 mm

说明书类：±1 mm

PE袋类：0~20 cm ±2 mm　20~50 cm ±3 mm

50~100cm ±5 mm

图示说明

裁切线

压线

反压线

间隔刀线 x/x mm

开槽

粘合区域

比例 1：1　单位 mm

样品版本

技术说明：

1、材料(楞形\克重配比)：100g双胶纸

2、工艺: 正反面印刷 骑马钉

3、印刷颜色: 2专 PANTONE Cool Gray 11C　PANTONE 186C

4、其他特殊说明:

严禁更改任何图案和位置分布！